Global 6500

Aircraft & Customer Support Description
Schedule A Rev 2.3

Document Effectivity: SN 9861 and Subsequent
Document Release: 2021-03-12

BOMBARDIER

TABLE OF CONTENTS

1. INTRODUCTION 1

1.2 Certification and Operational Capability 1

2. GENERAL DESCRIPTION 3

2.1 Overall Specification 3
2.2 Weight and Balance 3
2.3 Interior Dimensions 4
2.4 Exterior Dimensions 5
2.5 Performance 6
2.6 Structural Design 6
2.7 Landing Gear 6
2.8 Power Plant & Auxiliary Power Unit 6

3. SYSTEMS 7

3.1 Pressurization, Environmental Control and Oxygen System 7
3.2 Electrical System 7
3.3 Fire Protection 7
3.4 Flight Controls 7
3.5 Fuel System 7
3.6 Hydraulic System 8
3.7 Ice and Rain Protection 8
3.8 Lighting System 8

4. INSTRUMENTATION AND AVIONICS 9

4.1 Typical Instrument Panels 9
4.2 General Description 10
4.3 Auto Flight 10
4.4 Communications 10
4.5 Indicating / Recording System 10
4.6 Navigation 10

5. EQUIPMENT AND FURNISHINGS 12

5.1 Cabin configuration 12
5.2 Flight Deck 12
5.3 Soundproofing 12
5.4 Entry Area 13
5.5 Galley Features 14
5.6 Main Cabin Features 15
5.7 Lavatory, Water System and Overboard Toilet Service 18
5.8 Baggage Compartment 19
5.9 Exterior 19
5.10 Emergency Equipment 20
5.11 Loose Equipment 20

6. CUSTOMER SUPPORT SERVICES 21

6.1 Inspection and Acceptance Procedures 21
6.2 Flight Operations Support 21
6.3 Training 21
6.4 Technical Data and Services 22
6.5 Technical Support – SmartFix™ Plus Troubleshooting Tool 23
6.6 Smart Services 23
6.7 Computer Maintenance Management Services (CMMS) 23
6.8 Medical Assistance Program 23

7. WARRANTY 25

8. PATENT AND TRADEMARK PROTECTION 28

ADF	Automatic Direction Finder
ADS	Airworthiness Directives
ADS-B	Automatic Dependent Surveillance – Broadcast
AFCS	Automatic Flight Control Systems
AMLCD	Active Matrix Liquid Crystal Displays
AMM	Aircraft Maintenance Manual
AMTOSS	Aircraft Maintenance Task Oriented Support System
APR	Automatic Performance Reserve
APU	Auxiliary Power Unit
AVOD	Audio Video on Demand
BOW	Basic Operating Weight
BRNAV	Basic Area Navigation
BTU	British Thermal Unit per point of fuel
CAAC	Civil Aviation Administration of China
CAS	Crew Alerting System
CAT II	Category II flight conditions
CG	Center of Gravity
CMMS	Computer Maintenance Management System
CVR	Cockpit Voice Recorder
DC	Direct Current
DME	Distance Measuring Equipment
DWE	Delivery Weight Empty
EASA	European Aviation Safety Agency
ECS	Environmental Control System
EFB	Electronic Flight Bag
EFIS	Electronic Flight Instrument System
EICAS	Engine Indication and Crew Awareness System
EIS	Entry Into Service
ELT	Emergency Locator Transmitter
FAA	Federal Aviation Administration
FAR	Federal Aviation Regulation
FDR	Flight Data Recorder
FMS	Flight Management System
FOD	Foreign Object Damage
GFI	Ground Fault Interrupter
GNSS	Global Navigation Satellite System
GPS	Global Positioning System
HF	High Frequency
ICAO	International Civil Aviation Organization
IFE	In-Flight Entertainment
IFR	Instrument Flight Rules
IRS	Inertial Reference Systems
ISA	International Standard Atmosphere
ISI	Integrated Standby Instrument
JAR	Joint Aviation Authorities
ktas	Knots True Airspeed
LED	Light Emitting Diodes
LH	Left Hand
LPV	Localizer Performance Vertical
MAC	Mean Aerodynamic Chord
MDC	Maintenance Diagnostic Computer
MDL	Master Document List
MLG	Main Landing Gear
MLW	Maximum Landing Weight
MNPS	Minimum Navigational Performance Standards
MTOW	Maximum Take Off Weight
NAT	North Atlantic Tracks
NBAA	National Business Aviation Association

NLG	Nose Landing Gear
NM	Nautical Mile
OEC	Optional Equipment Catalog
OJT	On the Job Training
PBE	Portable Breathing Equipment
PCU	Power-Control Unit
P-RNAV	Precision Area Navigation
RH	Right Hand
RNP	Required Navigation Performance
RVSM	Reduced Vertical Separation Minimum
SBAS	Satellite Based Augmentation System
SBs	Service Bulletins
SELCAL	Selective Calling
SIPC	Supplemental Illustrated Parts Catalog
SL	Sea Level
SMM	Supplemental Maintenance Manual
SPM	Safety Performance Measurement
STC	Supplemental Type Certificate
SVS	Synthetic Vision System
TAWS	Terrain Awareness and Warning System
TCAS	Traffic Collision Avoidance System
TCCA	Transport Canada Civil Aviation
TSO	Technical Standard Orders
US-RNAV	US Terminal Area Navigation
VFR	Visual Flight Rules
VHF	Very High Frequency

1. INTRODUCTION

1.1 Scope

For the purpose of the present document, “Aircraft” shall mean: the Aircraft as defined in the Aircraft Purchase Agreement, including its power plant, systems, and equipment.

Also included is the Seller's interior completion describing the outfitting standards and general requirements to be used by the Seller in the work to be performed for the fabrication and installation of a Global 6500 standard interior, comprised of the interior, mechanical, electrical and avionics equipment and exterior paint application.

In addition, this document describes the Customer Support Services that are provided to the Buyer as part of the sale of the Aircraft, including Warranty, technical publications, crew training and the maintenance management system.

The Aircraft and its manufacture may be subject to changes during the course of the design, manufacture and certification process or as the result of any legislation, act, order, directive or regulation, or any interpretation thereof, of or by any government or governmental body. If such changes take place and apply to all aircraft in general or to all aircraft of the same category as the Aircraft and are effective after the date of the Agreement but before Delivery Time, Buyer shall pay Seller’s reasonable cost for such changes. If the incorporation of such changes delays the delivery of the Aircraft, that delay shall be an Excusable Delay under the Agreement.

For the purpose of the present document, “Document Effectivity” shall refer to the first Aircraft configuration subsequent to the specified Effectivity date that meets this document description.

1.2 Certification and Operational Capability

The Aircraft is certified to the Canadian Airworthiness Manual Chapter 525 (AWM 525) by Transport Canada Civil Aviation (TCCA) and additional requirements as defined in TCCA Type Certificate Data Sheet (TCDS) A-177 and Federal Aviation Regulations Part 25 (FAR 25) and additional requirements by the American Federal Aviation Administration (FAA) as defined within FAA TCDS T00003NY.

The Aircraft is certified for operations in day and night, under VFR and IFR conditions, for CAT II approaches, flight into known icing conditions and is compliant with RVSM airworthiness requirements.

This Aircraft is capable and meets the requirements of:

- North Atlantic Tracks (NAT) Minimum Navigational Performance Standards (MNPS) in accordance with AC 91-49;
- Basic Area Navigation (BRNAV) / Required Navigation Performance (RNP) 5, in accordance with AC 90-96A and EASA AMC20-4;
- RNP-10, in accordance with FAA Order 8400.12B, ICAO Doc 9613 PBN Volume II, Part B, Chapter 1 and EASA AMC20-12;
- GPS primary means navigation in oceanic and remote areas of operation in accordance with AC 20-138B and EASA AMC20-28;
- Precision Area Navigation (P-RNAV) in accordance with JAA TGL10 and AC 90-96A;
- US Terminal Area Navigation (US-RNAV) in accordance with AC 90-100A;
- Vertical Navigation operations in accordance with AC 20-129 and EASA AMC20-27;
- RNP-4, in accordance with ICAO Doc 9613 PBN Volume II, Part C, Chapter 1 and FAA Order 8400.33;
- Basic RNP-1, in accordance with ICAO Doc 9613 PBN Volume II, Part C, Chapter 3 and AC 90-105 for FAA RNP-1 (Terminal) operations;
- RNP APCH, in accordance with ICAO Doc 9613 PBN Volume II, Part C, Chapter 5, AC 90-105 for FAA RNP instrument approach with BARO-VNAV and EASA AMC20-27 for RNP APCH with BARO-VNAV;
- RF Legs, in accordance with AC90-105 Appendix 5; and

- RNP AR Approach with RF Legs (RNP ≥0.3 Approach and RNP 1.0 Missed Approach), in accordance with ICAO Doc 9613 PBN Volume II, Part C, Chapter 6; AC 90-101A, Appendix 2; AC 20-138B, Appendix 2 and EASA AMC20-26.

Unless otherwise agreed to between Seller and Buyer, Seller will provide Buyer with a TCCA Certificate of Airworthiness or a TCCA Certificate of Airworthiness for Export, which will permit the Aircraft to qualify for an FAA Standard Airworthiness Certificate.

Buyer is responsible for complying with the rules, laws and regulations of the jurisdictions in which it operates the Aircraft.

Seller shall not be obligated to obtain any further certificate or approval as part of this Agreement.

2. GENERAL DESCRIPTION

The Aircraft is a pressurized, fixed low-wing monoplane capable of achieving a nominal 6,600 NM mission range while carrying 8 passengers under certain conditions described below.

2.1 Overall Specification

Accommodation[1]	
Crew (minimum)	2
Passengers (std accommodation)	13
Engines	
Number	2
Make / Model	Rolls-Royce / Pearl 15
Thrust, Normal Take-Off (Flat rated to ISA+15°C, SL)	15,125 lb (67.3 kN)
Maintenance Program	On Condition
Pressurization	
Maximum Altitude with Sea Level Cabin Pressure	30,125 ft (9,182 m)
Cabin Altitude at Maximum Altitude	5,680 ft (1,731 m)
Fuel Capacity	
Overall Capacity (+0% -1%)	6,674 US gal (25,264 l)
Auxiliary Power Unit	
Make / Model	Honeywell RE220[GX]
Maximum Operational Altitude	45,000 ft (13,716 m)

Notes:

1. *Does not include flight observer seat.*

2.2 Weight and Balance

Design Weights and Capacities[1]	
A- Maximum Ramp Weight	99,750 lb (45,246 kg)
B- Maximum Take-Off Weight	99,500 lb (45,132 kg)
C- Maximum Landing Weight	78,600 lb (35,652 kg)
D- Maximum Zero Fuel Weight	58,000 lb (26,308 kg)
E- Basic Operating Weight (BOW) [2]	52,230 lb (23,691 kg)
F- Maximum Fuel Weight[3]	45,050 lb (20,434 kg)
Maximum Payload (D-E)	5,770 lb (2,617 kg)
Payload with Maximum Fuel (A-E-F)	2,470 lb (1,121 kg)
Fuel with Maximum Payload (A-D)	41,750 lb (18,938 kg)

Notes:

1. *The Aircraft will be weighed prior to final Delivery. A weight and balance report including loading charts and an equipment listing is provided as required by regulations.*
2. Basic Operating Weight (BOW) and corresponding maximum payload and payload with maximum fuel are provided for illustration purposes only. The BOW assumes a Delivery Weight Empty (DWE) of 50,434 lb (22,876kg) ± *1%* and 1,796 lb (815kg) of baseline operating items (such as engine oil, unusable fuel, manuals, galley and cabin supplies, lifevests, water service and toilet charge, four (4) crew and crew baggage). The weight is exclusive of customer selected options and any adverse weight impacts incorporated into the production configuration from Service Bulletins (SBs) and Airworthiness Directives (ADs).
3. *The Maximum Fuel Weight is based on a fuel density of 6.75 lb/US gal (0.809kg/l). The resolution of the fuel system indication is in 50 lbs (25 kg) increments.*

2.3 Interior Dimensions

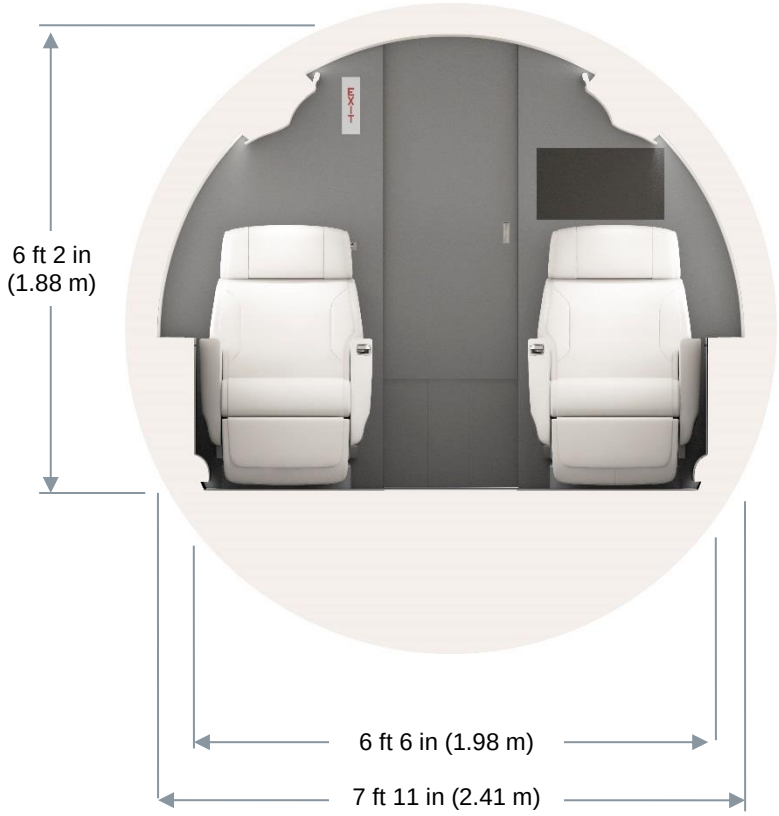

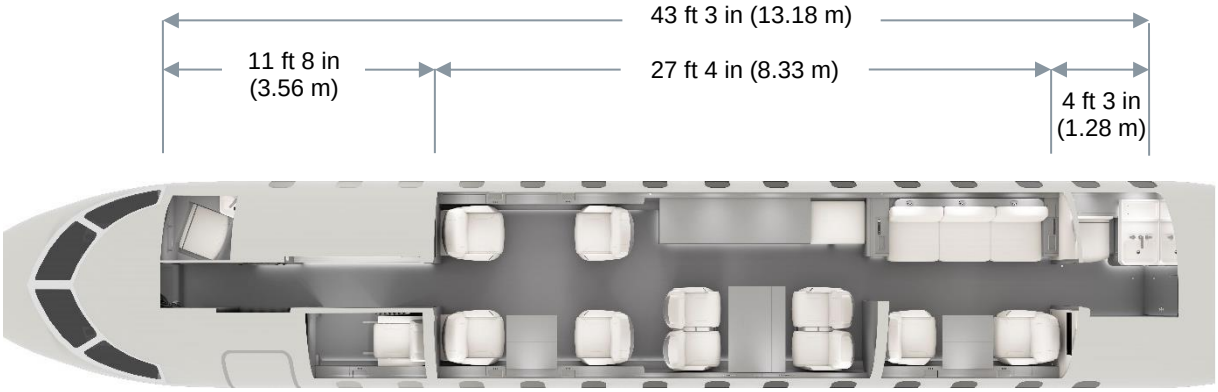

Note: Approximate dimensions are shown. For illustration purpose only.

2.4 Exterior Dimensions

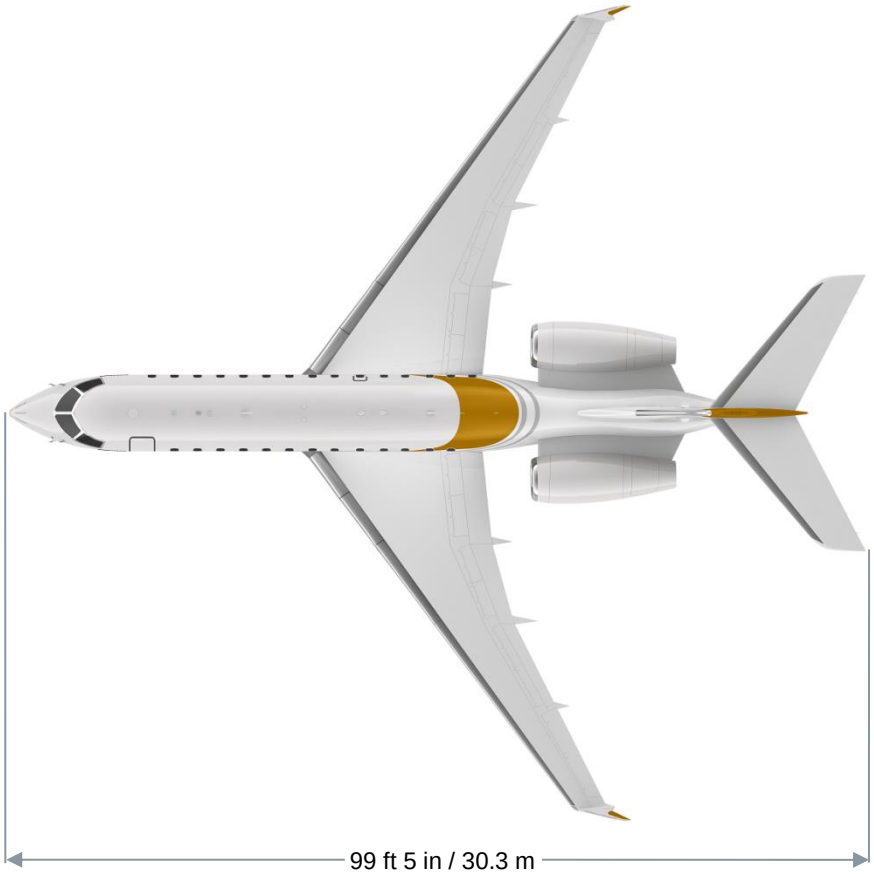

Note: Approximate dimensions are shown. For illustration purpose only.

2.5 Performance

All performance data are preliminary and based on a standard Aircraft certified in accordance with Section 1.2, and operated in a standard (ISA) conditions day. Options, Aircraft customization and/or foreign certification requirements requested by Buyer may result in a change in performance.

Take-Off (±3%)(1)	
Take-off Field Length (SL, ISA, MTOW)	6,145 ft (1,873 m)
Landing (±3%)(1)	
Landing Distance (SL, MLW)	2,670 (814 m)
Cruise Performance	
High Speed Cruise	M 0.88 (505 KTAS)
Typical Cruise Speed	M 0.85 (488 KTAS)
Maximum Certified Operating Altitude	51,000 ft (15,545 m)
Initial Cruise Altitude after MTOW Departure	41,000 ft (12,497 m)
Noise	
	Meets Stage 4 limit(2)
Range (±3%)(3) at cruise speed of M 0.85	
At 8 Passengers (1,800 lb payload)	6,600 NM (12,223 km)

Notes:

1. *Take-off and landing performance are based on a hard dry surface with zero slope, zero wind and the most favorable use of brakes, flaps, spoilers, landing gear and thrust. Take-off distance is without allowances for cabin pressurization, air conditioning and ice protection. Thrust reversers are not used.*
2. *Complies with* ICAO Chapter 4, Annex 16, Volume I, Amendment 8 as well as FAR 36 Stage 4.
3. *Range is provided for illustration purposes only and is determined by using NBAA range format with IFR fuel reserves in still air, based on a BOW of 52,230 lb (as further described in Section 2) with an assumption of 225 lb per passenger. Allowances are made for normal bleed air requirements for cabin pressurization and air conditioning (APU off). No allowances are made for maneuver, wind and ice protection. The center of gravity (CG) location is assumed to be at 29% Mean Aerodynamic Chord (MAC). The maximum Take-Off fuel allowed is considered not being limited by airport special procedures, field length and CG. The performance is based on the use of fuel with an average lower heating value of 18,550 BTU/lb (43.147MJ/kg) and a density of 6.75 lb/US gal (0.809kg/l).*

2.6 Structural Design

The Aircraft structure is primarily fabricated from aluminum alloy but also includes steel alloys, stainless steel, titanium and composites.

The fuselage is composed of semi-monocoque aluminum alloy construction comprised of skins, frames and stringers. Areas adjacent to or affected by high heat sources are constructed of fire-resistant or fireproof materials as appropriate.

The wing is a swept back unit mounted under the fuselage and consists of aluminum alloy skins, ribs spars and stringers.

The empennage is of a “T” configuration, comprising an incidence adjustable horizontal stabilizer with elevators, mounted at the top of a vertical stabilizer and rudder and it is metal and composite construction.

2.7 Landing Gear

The Aircraft is equipped with a fully retractable tricycle landing gear. The landing gear extension and retraction system is electrically controlled and hydraulically actuated. The system features free-fall capability as a backup. The steerable nose landing gear is free-rolling and the two (2) trailing-link type main landing gear units are equipped with hydraulically operated carbon brakes and anti-skid systems.

2.8 Power Plant & Auxiliary Power Unit

Two (2) Rolls-Royce Pearl 15 engines power the Aircraft. Each engine produces 15,125 lb of thrust (ISA+15°C) at sea level.

The integrated power plant features electrically controlled and hydraulically operated target-type thrust reversers.

A Honeywell RE220[GX] gas turbine Auxiliary Power Unit (APU) is installed in the aft fuselage area providing bleed air and shaft power on the ground and in flight.

3. SYSTEMS

3.1 Pressurization, Environmental Control and Oxygen System

The bleed air system provides bleed air to control the ECS, wing anti-ice, and engine starting. The ECS performs the functions of pressurization and air conditioning.

The air conditioning system supplies air to the cabin and cockpit areas for heating, cooling, ventilation and pressurization. During normal operation, cockpit and cabin temperature can be independently controlled.

The system includes automatic controls that monitor the interior to ensure proper cabin pressure is maintained throughout the flight.

The oxygen system supplies oxygen to the crew and the passengers in case of cabin depressurization, smoke/fire contamination, or other emergency.

A crew oxygen system including quick-donning demand type masks with mask-mounted regulators is provided for each pilot and flight observer seat occupant.

An independent passenger oxygen system is installed in the Aircraft.

3.2 Electrical System

The Aircraft is equipped with an electrical system, which uses AC as a primary source of electrical power. The primary power of the Aircraft is 3-phase variable frequency 324-596 Hz, 115 volt AC. 28 volt DC power is derived from the primary A/C power. The electrical power is provided by two (2) generators coupled to each engine, one (1) generator coupled to the APU and one (1) ram air turbine, which is deployed in case of emergency.

The Aircraft is also equipped with nickel-cadmium batteries for starting the APU and backing up critical systems in emergency situations.

On the ground, power can also be supplied through an external power receptacle.

3.3 Fire Protection

A fire detection and warning system with fault discrimination is installed with continuous element fire detectors located in each engine nacelle and in the APU compartment. A wheel well overheat system warns of an overheat condition in either of the main wheel wells.

An electronic type smoke detector system is installed in the baggage compartment area.

A fire extinguishing system is installed for the engines and another system is installed for the APU.

Each fire extinguisher bottle is fitted with a low-pressure switch, which provides a caution indication when pressure is lost because of discharge or leakage.

3.4 Flight Controls

The fully powered flight control systems include the primary and secondary flight controls.

The primary flight controls consist of the ailerons, elevators, and rudder. The ailerons and the rudder can be trimmed, while the pitch trim is accomplished using the horizontal stabilizer.

The secondary flight controls consist of the horizontal stabilizer, high lift devices and the spoilers. Ground spoilers are used for ground lift dumping only. Flight spoilers are used for roll assist, airspeed reduction, in-flight lift dumping and ground lift dumping.

3.5 Fuel System

Fuel tanks are installed in the wing and fuselage. Wing tank design restricts fuel sloshing, limiting center of gravity shifts with changes in Aircraft attitude.

A single point pressure refueling system, controlled by the refuel control panel, allows any fuel tank to be refueled to the desired level, following a certain sequence. The system permits suction defueling.

3.6 Hydraulic System

The hydraulic system provides power to operate the landing gear, brakes, nose wheel steering, thrust reversers and spoilers. Three (3) fully independent hydraulic systems provide power to operate the flight control surfaces, main and nose landing gear, main landing gear downlock assist actuators, brakes, nose wheel steering, and main and nose landing gear doors. There is no connection between any of the systems, such that a fluid leak or contamination in one system does not affect the others.

3.7 Ice and Rain Protection

The function of the ice and rain protection system is to prevent ice from occurring on some of the components and areas of the aircraft. Ice detectors alert the flight crew of icing conditions.

The wing leading edges and the engine intake cowls are heated using engine bleed air. The windshields, windows, and air data probes are heated using electrical power.

3.8 Lighting System

The lighting system provides interior and exterior illumination of the aircraft. In addition, lights provide information and guidance to passengers in normal and emergency situations. The lighting system includes:

- Flight compartment lighting;
- Passenger compartment lighting;
- Service compartment lighting;
- Exterior lighting;
- Emergency lighting; and
- Service and maintenance lighting.

4. INSTRUMENTATION AND AVIONICS

4.1 Typical Instrument Panels

Note: For illustration purpose only.

4.2 General Description

The Aircraft is equipped with the Bombardier Vision[1] flight deck avionics suite, complete with four (4) 14"x11" landscape active matrix liquid crystal displays (AMLCD). The window size allows a 50 / 50 vertical split screen view configuration, offering multifunction windows. Each of the displays can be utilized in a manner that allows multi-tasking of the display surface area. These displays are horizontally aligned, for better crew resource management. The cockpit architecture is designed to support dispatch without the need for departure, arrival, approach, or airport paper charts aboard the flight deck.

4.3 Auto Flight

Dual three-axis, Category II Automatic Flight Control Systems (AFCS) is provided with pitch and roll channels and an independent linear actuator for the yaw axis. The AFCS includes computations for

- Flight guidance;
- Autothrottle;
- Autopilot;
- Yaw damper; and
- Automatic pitch trim.

The flight director modes include Emergency Descent Mode which will automatically turn and dive the Aircraft down to 15,000 ft when the system senses pressurization issues and pilots do not take action within a specific amount of time.

4.4 Communications

The communication system provides equipment designed to supply communication in the Aircraft, between different aircraft, and between the Aircraft and ground stations.

The Aircraft communication system includes:

- Three (3) VHF communication radios;
- Two (2) HF transceivers;
- One (1) dual SELCAL system capable of monitoring three (3) VHF and two (2) HF radios;
- One (1) handset using the cabin satellite airborne telephone system;
- One (1) data communication channel (ACARS), which in conjunction with the VHF meets the requirements of Future Air Navigation System (FANS 1/A+) including Airline Operational Control (AOC), Air Traffic Services (ATS), Facilities Notifications (AFN), Automatic Dependent Surveillance - Contract (ADS-C) and Controller Pilot Datalink Communication (CPDLC); and
- One (1) dual channel interphone system with hand-held microphones and individual controls for pilot, co-pilot and flight observer seat.

4.5 Indicating / Recording System

The indicating and recording system consists of components that record and display critical aircraft information and system operation and includes:

- Electronic Flight Instrument System (EFIS);
- Engine Indication and Crew Awareness System (EICAS);
- Synchronized digital GPS Clock;
- Cockpit Voice Recorder (CVR);
- Flight Data Recorder (FDR); and
- Emergency Locator Transmitter (ELT).

4.6 Navigation

The navigation system calculates and illustrates the Aircraft's attitude, altitude, and position relative to the surface of the earth. Present position and future position are shown on the Primary Flight Displays (PFD). The system includes:

- Two (2) Integrated Flight Information Systems (IFIS)[2] with dual File Server Unit;
- One (1) Head-Up Display (HUD) System;
- One (1) Enhanced Vision System (EVS);
- One (1) Synthetic Vision System (SVS);
- One (1) Electronic Integrated Standby Instrument (ISI);
- One (1) Air Data System (ADS) composed of three (3) Air Data Computers (ADC);
- One (1) Auto-tilt Weather Radar;
- Three (3) Inertial Reference Systems (IRS);
- Two (2) GPS WAAS receivers;
- Two (2) VHF navigation receivers;
- Two (2) ADF receivers;

[1] *Bombardier Vision is a trademark of Bombardier Inc. or its affiliates.*

[2] *Service subscription to updating charts is not included.*

- Two (2) DME transceivers;
- One (1) Traffic Surveillance System and One (1) standalone Transponder capable of:
    - Dual transponder functionality;
    - TCAS II change 7.1; and
    - ADS-B Out.
- Two (2) Radio Altimeter systems;
- One (1) Terrain Awareness and Warning System (TAWS); and
- Three (3) Flight Management Systems (FMS).

5. EQUIPMENT AND FURNISHINGS

All components and materials are selected for quality, durability and ease of maintenance with weight as a consideration. Seller reserves the right to substitute components of equal quality should a lack of availability be documented by the chosen vendor. Seller is not responsible for variations in dye lots of paint or fabrics or variations in grain and color of natural wood veneers, leather or other coverings from Buyer approved sample, due to the natural or inherent properties of all of the foregoing.

Buyer may choose from a large selection of pre-qualified materials, fabrics, carpets, colors, patterns and veneers. Some materials made available exceed the standard material budget and if selected, will expose Buyer to additional charges.

All interior instructions are placarded in the English language.

5.1 Cabin configuration

In addition to the two (2) pilots in the flight deck the standard cabin accommodates one (1) crew in the entrance area flight observer seat, one (1) crew in the crew area and thirteen (13) passengers in the cabin with the RH mid upper bulkhead removed. The standard configuration is a non-smoking cabin and all seating positions are certified for taxi, take-off and landing. The standard cabin is certified for FAR Part 91 operations. Operational approval for FAR Part 135 operations for flights over ten (10) and up to twelve (12) hours and for flights exceeding twelve (12) hours of duration requires additional optional equipment available in the Optional Equipment Catalog (OEC).

Note: Top view of standard cabin configuration. For illustration purpose only.

5.2 Flight Deck

The flight crew area has thermal and acoustic insulation and is fully lined and furbished. The following items are included in the standard cockpit configuration:

- Reclining and adjustable pilot and co-pilot sheepskin covered seats;
- Two (2) sun filter type roller screens;
- Storage for flight handbooks and maps adjacent to each;
- Two (2) single universal GFCI electrical outlets and two (2) RJ-45 ports;
- One (1) grab bar, on the central headliner; and
- Two (2) stowable tablet holders with power provisions.

5.3 Soundproofing

The Aircraft is soundproofed utilizing vibro-acoustic materials. The Global 6500 aircraft Standard interior has average sound level targets of 52 db SIL (Speech Interference Level) and 70 dBA and average levels not to exceed 54 db SIL and 72 dBA. The aircraft is surveyed at FL 450 and at a speed of M 0.80, and in typical conditions (ex. water-serviced, life rafts on board, galley, wardrobe, vanities and cabinets stocked, air conditioning ON and gaspers turned OFF).

Sound is measured at each cabin seat and the linear average of all seats is calculated to determine the average cabin sound levels.

Target and not to exceed sound levels shall be identified by the Global Completions Center (GCC) upon final Customer approval of the aforementioned interior configuration and material selection.

5.4 Entry Area

The entry area contains the main entry door, entrance enclosure and the crew area on the left hand side, the forward lavatory, the galley and galley annex on the right hand (RH) side.

The left-hand (LH) entrance enclosure is used for general storage, emergency and operating equipment.

The LH entrance enclosure includes:

- Stowage provisions for various items (umbrellas, passenger briefing cards, emergency equipment);
- An acoustical curtain stowed behind a hinged door;
- A lockable compartment;
- Two (2) single universal GFCI electrical outlets; and
- One (1) flight observer seat.

A crew area is installed on the LH side between the main entry door and the LH forward bulkhead. The crew area includes:

- A privacy curtain;
- One (1) single seat facing forward;
- Sideledge storage;
- Two (2) universal GFCI electrical outlets;and
- Storage cabinet with fold down table;

The overhead storage compartment above the crew area incorporates the following:

- A Media Bay which can house customer furnished entertainment equipment which can be connected with the aircraft audio/video system;
- Four (4) single universal electrical outlets;
- One (1) RJ-45 port, one (1) 4K HDMI port, two (2) HD HDMI ports, one (1) audio jack;
- One (1) high definition media streamer for customer supplied audio/video content, including 2 USB ports; and
- Two (2) Wireless Passenger Control Units (WPCU).

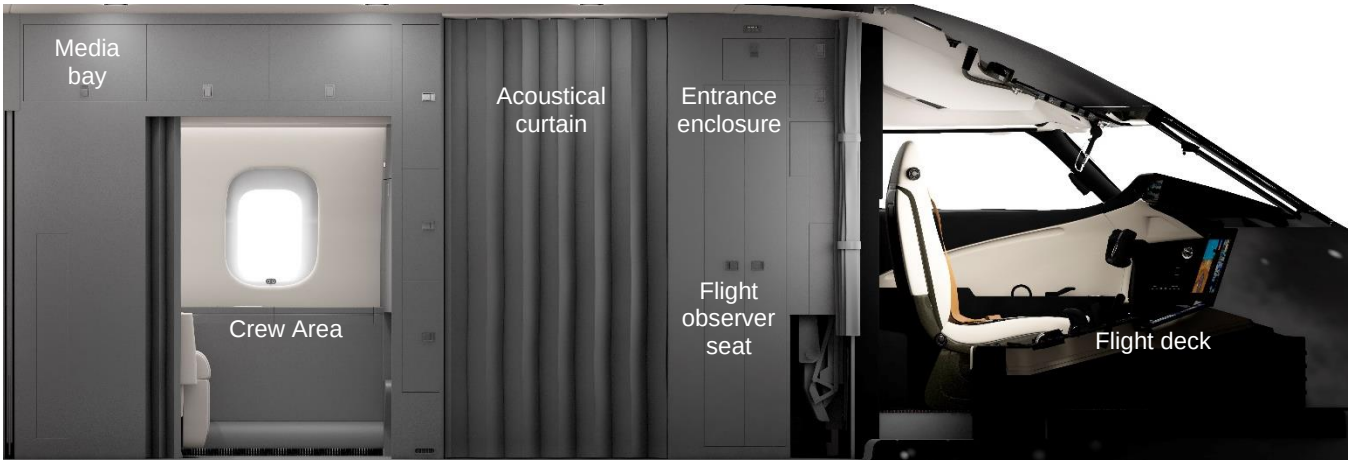

Note: Elevation view of LH side entry area. For illustration purpose only.

5.5 Galley Features

The galley is installed on the RH side of the Aircraft and includes:

- China storage drawers;
- A crystal showcase;
- Inserts to accommodate the customer supplied china, crystal and flatware sets;
- A flight attendant HD touchscreen;
- One (1) pull-out work surface;
- One (1) steam/convection oven;
- One (1) microwave/convection oven;
- An aircraft-certified storage compartment equipped with one (1) utility outlet and a pull-out tray;
- One (1) air chiller;
- An insulated chilled area with a drawer and four (4) perforated pull-out removable shelves behind a resting door;
- A chilled drawer with two (2) rows of soda cans;
- A drawer for wine bottle and tray storage;
- One (1) stainless ice drawer with divider, small clean ice basket and drainage;
- One (1) dirty dish bin drawer;
- One (1) sealed waste drawer with a garbage bag retainer ring;
- One (1) stainless steel sink with strainer, faucet and sink cover with cutting board on reverse side;
- Paper towel dispenser; and
- Two (2) single universal GFCI electrical outlets.

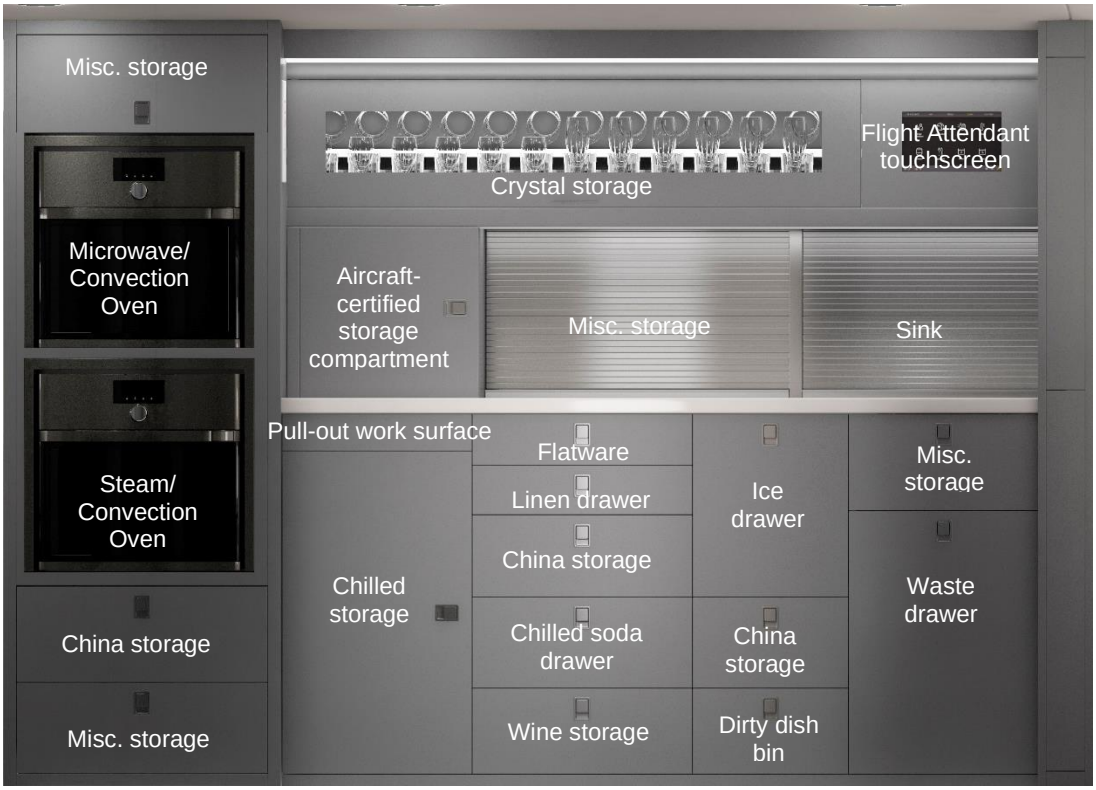

Note: Elevation view of RH side galley area. For illustration purpose only.

5.6 Main Cabin Features

The standard cabin is a 13-passenger layout with three (3) distinct seat zones. The main cabin has a flat floor throughout and includes the following:

- A manually operated sliding pocket door, with electric release, separating the entry area from Zone 1;
- A manually operated sliding pocket door, with electric release, leading into Zone 3;
- A RH mid removable upper bulkhead on the top of the Zone 3 divan forward end cabinet. This bulkhead must be removed to allow the forward seat in Zone 3A to be occupied during taxi, take-off and landing;
- A RH hinged door to close out the aft lavatory;
- A communication system including passenger notification intercoms and flight attendant call;
- A dual channel Iridium telephone system;
- An Inmarsat Swift Broadband (SBB) satellite communication system providing up to 432 kilobits per second (kbps) internet speed capability and a voice channel when not in use by the cockpit;
- Twelve (12) universal GFCI electrical outlets in the cabin at various locations;
- Three (3) Wireless Passenger Control Units (WPCU) to control the cabin system including entertainment, cabin utilities and displays;
- A cabin management system featuring a fiber optic network;
- An In-Flight Entertainment (IFE) system including worldwide maps and audio cabin briefing;

Note: Top view of standard cabin.
For illustration purpose only.

- One (1) 24” 4K monitor mounted on the aft facing bulkhead in Zone 1A;
- One (1) 24” 4K monitor mounted on the forward facing bulkhead in Zone 3B;
- One (1) HDMI port at MSL[1] in zone 1A;
- One (1) HDMI port at MSL[1] in zone 3B;
- Two (2) Bluetooth wireless audio receivers and one (1) audio input (1/8" stereo jack) for audio distribution to speakers and headphones;
- An audio system comprising of ten (10) speakers and four (4) subwoofers connected to audio / visual media system;
- Six (6) cabin headsets with active noise compensation provided as loose equipment;
- Electric accordion type window shades;
- A Passenger Service Unit (PSU) incorporates a handrail, oxygen masks for each seating position, cabin entertainment system speakers, PA speakers, individual adjustable air gaspers, and lighting;
- Cabin lighting system including boarding lights, accent lights, emergency lights, ordinance signs, seat reading and table lights; and
- A custom 100% wool carpet for the floor in the entrance area, crew area, cabin, and lavatories. Factory standard materials are used for the cockpit and baggage carpet.

Note: Elevation view of club seating.
For illustration purpose only.

The standard floorplan includes two (2) club seating arrangements in zone 1 and one (1) in zone 3B, and includes:

- Two (2) patented Bombardier executive single passenger seats capable of berthing and reclining, tracking and swiveling with legrest, and inboard armrest storage;
- A sideledge running throughout the cabin length incorporating drink holders at each single seat location, storage boxes, receptacle for plug-in tablet holder, and switch panels;
- One (1) bi-fold, sideledge deployed, pull-out table;
- One (1) source/volume control at each single seat location;
- A headset jack at each single seat location; and
- Emergency equipment.

Note:

1. *The main passenger cabin RH forward facing seat in the forward cabin and LH forward facing seat in the aft cabin are the MSL.*

Note: Elevation view of double passenger seating. For illustration purpose only.

The double passenger seat arrangement in zone 2B includes:

- Two (2) double seats capable of reclining and in-base tracking;
- One (1) manually operated Hi-Lo single pedestal table installed between double seat grouping;
- A removable conference table plug-in extension;
- Two (2) headset jacks on the sideledge and two (2) on the inboard armrests; and
- Emergency equipment.

Note: Elevation view of credenza and low cabinet. For illustration purpose only.

The credenza and low cabinet monuments in zone 2A include:

- Storage;
- Emergency equipment.

Note: Elevation view of divan and divan end cabinets. For illustration purpose only.

The 16G 3-place divan and end cabinets arrangement in zone 3A include:

- Three (3) telescopic shoulder harness posts;
- Provisions for a sleeping belt;
- Berthing capability with release lever;
- Storage space below the divan;
- Emergency equipment; and
- Forward and aft end cabinets with cup holders, switch panel, plug-in tablet holder receptacle, headset jack, armrest padding and storage.

Note:

When the removable bulkhead is installed, the divan can accommodate two (2) passengers in the aft seating position for Taxi, Take-Off and Landing (TT&L) operations. When it is removed, three (3) can seat on the divan during TT&L operations.

5.7 Lavatory, Water System and Overboard Toilet Service

The Aircraft is equipped with two (2) lavatories.

The forward lavatory is located in the entry area, between the flight deck and the galley. The lavatory is closed from the entry area with a hinged door.

The aft lavatory is located between the aft cabin and the baggage compartment. The lavatory is closed off from the cabin with a hinged door and closed from the baggage area with a hinged door. A mirror is fitted to the aft cabin bulkhead. An aft wardrobe and storage cabinet are installed on the LHS of the aft lavatory. The wardrobe and cabinet is enclosed by hinged doors and include a removable coat rod, fixed shelves, removable/adjustable shelves and miscellaneous storage.

Both lavatories include:

- A vacuum toilet with a hinged padded lid and external water servicing;
- A vanity cabinet with a sink and faucet and amenities (toilet tissue dispenser, facial tissue dispenser);
- General storage, hand towel holders, a universal GFCI electrical outlet, and a sealed trash container;
- A smoke detector and a drop-down oxygen mask; and
- An air gasper, lights and an ordinance sign.

The Aircraft water tank has a storage capacity of 28.6 US gallons (108.3 liters) of usable water.

Water filtration is accomplished through a high quality filter located outboard of the aft wardrobe and is easily removable.

Note: Elevation view of forward lavatory. For illustration purpose only.

Note: Elevation view of aft lavatory. For illustration purpose only.

5.8 Baggage Compartment

The baggage compartment is accessible in flight through the lavatory. An airframe door provides access to load and unload the compartment directly from the exterior of the Aircraft.

The compartment includes:

- Two (2) fold-down shelves with support gusset and restraint straps;
- One (1) baggage net across the baggage door.
- One (1) 60” removable hang-up bar;
- One (1) LH fold-up hang-up bar;
- Circuit breaker access panel;
- Two (2) storage areas one on each side of the circuit breaker access panel each with removable coat rod and net;
- Storage provisions for the removable mid cabin bulkhead;
- Storage with net forward of the external baggage door;
- One (1) net to prevent bags from falling against external baggage door and one (1) flip-out baggage door flap protective cover for the outer fuselage skin;
- Lighting, universal GFCI electrical outlet and external baggage door lock override; and
- Emergency equipment.

5.9 Exterior

The exterior standard paint is one (1) single color, non-metallic polyurethane solid base paint with two (2) stripes shown on fuselage, nacelles, and winglets. Registration markings are painted on the engine nacelles in up to two (2) colors.

The inside of the following is painted to match the fuselage color:

- Main entrance door and the baggage door edges and frames;
- The airstair at the main entrance;
- All service door panels, inside of all modified fairing and compartments; and
- Main and nose landing gear doors (5) and the main wheel well doors (2).

The following edges and surfaces are polished:

- The original bright work including the leading edges of the horizontal and vertical stabilizer, wings and winglets, and engine intake cowl and pylon;
- Cabin window surrounds;
- Cockpit windshield frame;
- Doors including main door handle, baggage door handle and aft equipment bay door handle;
- Main entrance door tread plate (interior);
- Section around APU exhaust;
- Surround of the pre-cooler exhaust grill under pylon; and
- All exterior access door latches.

Clear plastic erosion protection is applied over:

- The radome (after paint);
- The winglet leading edges;
- The navigation light lenses;
- The horizontal stabilizer tips; and
- Forward edges of the blade antennas.

Some surfaces remain factory finished including:

- The landing gear and wheel rims (white).

5.10 Emergency Equipment

Additional equipment is provided for crew and passenger safety for emergency purpose. The equipment includes:

- Four (4) fire extinguishers;
- Crew and passenger life vests for each crew member and passenger;
- Two (2) FAR Part 135 compliant rafts (capacity 18 people) with 406 MHz ELT;
- One (1) quick donning oxygen mask with detachable smoke goggles for pilot, co-pilot and flight observer seat occupant;
- Four (4) LED rechargeable flashlights;
- Two (2) Portable Breathing Equipment (PBE);
- One (1) first aid kit;
- One (1) crash axe;
- One (1) over wing emergency escape lanyard;
- Two (2) smoke detectors with EICAS annunciation – one (1) in each lavatory; and
- One (1) electronic type smoke detector in the baggage compartment.

5.11 Loose Equipment

Additional loose equipment is provided for operational and maintenance support. This equipment is not included in the performance calculation and BOW estimates provided in this document. This includes:

- Three (3) noise cancelling headsets (crew);
- One (1) sunshield kit, two (2) pieces;
- Two (2) sun visors;
- One (1) HUD combiner sun visor;
- Eight (8) throw pillows;
- One (1) low cabinet cushion (when applicable);
- Two (2) seat belt extensions / demo units;
- One (1) divan sleeping belt;
- One (1) plug-in ashtray;
- Three (3) plug-in tablet holders;
- Twenty-five (25) passenger briefing cards;
- One (1) oxygen demo unit;
- Two (2) therapeutic oxygen masks with 12 ft oxygen hoses, a nebulizer, an adjustable flow meter;
- Twelve (12) sets of aircraft keys;
- Six (6) fuel cap keys;
- Four (4) golf size umbrellas;
- Eighteen (18) coat hangers;
- One (1) sink cover;
- Various throw rugs for maintenance;
- Various maintenance runners;
- Maintenance covers for all crew and passenger seats and divans;
- One (1) water filling station adapter hose;
- One (1) towbar assembly;
- One (1) maintenance laptop and all accessories for aircraft maintenance tests; and
- One (1) maintenance tablet computer.

6. CUSTOMER SUPPORT SERVICES

6.1 Inspection and Acceptance Procedures

Seller will advise Buyer when the Aircraft will be available for Buyer's inspection and acceptance in accordance with the Agreement. Buyer will be entitled to have a maximum of six (6) persons to participate in the inspection and acceptance of the Aircraft. However, only two (2) representatives of Buyer may participate in flight tests due to safety, insurance and regulatory requirements. Should Buyer's representative fly as co-pilot, said representative must be type certified on the aircraft with a validated license.

6.2 Flight Operations Support

Seller will provide, at no additional cost, pilot services for the following activities:

- Two (2) pilots to fly the Aircraft during the inspection and acceptance flight test prior to Delivery Time; and
- Upon request by Buyer, one (1) pilot, for a period not exceeding fourteen (14) days from Delivery Time, to familiarize Buyer's flight crews with day-to-day Aircraft operations, provided that Buyer executes Seller's standard Pilot Services Agreement prior to Delivery Time.

In addition, Seller will provide, at no additional cost, one (1) entry-into service ("EIS") technician, to familiarize Buyer's technical crew with general tasks and troubleshooting procedures for the Aircraft, at Buyer's home base, for a period not exceeding fourteen (14) days of support within six (6) months from Delivery Time. Days of support include flying days, travel days and/or standby days.

Buyer shall provide Seller a written notice a minimum of two (2) weeks prior to the dates on which it will require the EIS support as well as reasonable assistance to obtain any and all necessary work permits, authorizations, export or import permits, visas, validations and security clearances required for the EIS technician to be able to provide its support at Buyer's home base.

Buyer shall reimburse Seller for all of the EIS technician's and pilot's reasonable travel and living expenses during such fourteen (14) day period. Such support is not redeemable for cash and has no cash value in the event Buyer chooses to forego these services.

6.3 Training

As part of the Purchase Price, Seller shall make available, at authorized facilities, the following courses:

- An Initial Type Rating course for two (2) qualified pilots;
- A Transport Canada/ FAA/EASA B1/CAAC MEII approved Initial Type ground maintenance-training program for two (2) mechanics; and
- A Cabin Crew Type Familiarization Training for one (1) flight attendant.

Also, Seller shall provide operational training for two (2) personnel and familiarization training for up to four (4) additional personnel with respect to Seller-determined features of the Aircraft interior completed at Bombardier's facilities and Seller-determined Bombardier published options. Such operational and familiarization training will be web-based and accessible through the Internet at a location to be provided by Buyer.

All training should be completed before placing the Aircraft into service, but, in any event, all training shall be completed no later than one (1) year from Delivery Time, at which time, Buyer's rights to training at no additional cost shall expire. Buyer shall be responsible for all travel and living expenses of Buyer's personnel.

Training described above shall be provided in the English language and does not include On the Job Training (OJT) that may be required by the relevant local national aviation authority (NAA) Inspector.

6.4 Technical Data and Services

The following documentation and technical publications, that are included in the Purchase Price of the Aircraft, are provided to Buyer by Seller at Delivery Time in electronic form as a single-user license for the Bombardier SmartPubs viewer:

Flight Manuals:

- Airplane Flight Manual[3];
- Flight Crew Operating Manual[3];
- Flight Planning & Cruise Control Manual[3]; and
- Quick Reference Handbook[3].

Maintenance Manuals:

- Aircraft Illustrated Parts Catalog;
- Aircraft Maintenance Manual (Part Two);
- Component Maintenance Manual –
- Ground Handling & Servicing Information;
- Illustrated Tools and Equipment Manual;
- Maintenance Planning Document;
- Nondestructive Testing Manual;
- Service Bulletins;
- Standard Practices Manuals;
- Structural Repair Manual;
- System Description Section (AMM Part One);
- System Schematic Manual;
- Time Limits/Maintenance Checks;
- Weight & Balance Manual;
- Wiring List Manual; and
- Wiring Manual.

Completion Manuals:

- Supplemental Time Limits Maintenance Checks;
- Instructions for Continued Airworthiness for all installed STCs;
- General Arrangements, Layouts & Schematics (includes Placard Drawings);
- Wiring Diagrams Manual;
- Rockwell Collins Operation Guide: Quantity and media as per Rockwell Collins Revision service Form;
- Cabin Handbook[3];
- Supplemental Maintenance Manual (SMM);
- Supplemental Illustrated Parts Catalog (SIPC); and
- Vendors Manuals (CMM);

Other Manuals:

- ATA 100 Breakdown (AMM)
- ATA 100 Breakdown (SPM)
- Aircraft Recovery Manual;
- Airport Facilities Manual;
- Crash Crew Chart;
- Dispatch Deviation Guide (FAA)
- Dispatch Deviation Guide (EASA)
- Dispatch Deviation Guide (TC)
- Ground Operation Checklist;
- Maintenance Facilities Manual;
- Water Servicing Guide[3];
- Waste Servicing Guide[3];
- Deicing / Anti-Icing Fluid Application Information Guide[3];
- Refueling Guide[3];
- Smoke & Fire Elimination Checklist; and
- Passenger Safety Information Card[4].

The engine manufacturer will supply the engine manuals.

The completion manual list is subject to change, a definitive customized list will be provided to the Buyer prior to Delivery Time.

The completion manuals do not have revision service. The basic issue of the completion manuals will be provided at Delivery Time and one final revision for some of the completion manuals will be distributed within the ninety (90) days following Delivery Time.

Airworthiness limitations (AWL) are provided within the Instruction for Continued Airworthiness (ICA) for each installed STC, as applicable.

In addition, commencing at Delivery Time, Seller shall periodically make available to Buyer, at the last address provided by Buyer in writing to Seller, service bulletins and general information applicable to the Aircraft, as well as any amendments to the documentation and technical publications referred to above applicable to Buyer's Aircraft (except for engine manuals and completion manuals), for a period of tem (10) years after delivery of the last Global 6500 Aircraft manufactured by Seller. Seller shall provide this service at no additional cost to Buyer for a period of

[3] *Item is also provided as a hard copy version.*

[4] *Item is only provided as a hard copy version.*

five (5) years from Delivery Time, except for engine manuals ("Free Revision Period"). At the end of the Free Revision Period, this service will be automatically renewed each year and charged to Buyer's account, unless cancelled (or modified) by Buyer no later than thirty (30) calendar days from the date of the invoice for such renewal. Seller will issue a notice sixty (60) days prior to such auto-renewal.

It is understood that the documentation and publications provided under this paragraph and any other software, data, drawings or information related to the Aircraft, including any copies thereof, shall not be reproduced or disclosed without Seller's authorization and are proprietary to Seller and that all rights to patent, copyright, trademark, trade secret and other intellectual property rights therein belong to Seller. Buyer agrees not to modify, translate, reverse assemble, reverse engineer or decompile such documentation, publication, software, data, drawings or other information. Further, Buyer agrees to use such documentation, publications, software, data, drawings or other information solely to maintain, operate or repair the Aircraft.
All documentation and technical publications provided are subject to the then current Bombardier Business Aircraft Technical Publications Terms and Conditions available on the Bombardier Business Aircraft customer portal website[5] by navigating to LIBRARY > Technical Publications > Technical Publications Terms and Conditions. The terms and conditions are subject to change.

6.5 Technical Support – SmartFix™ Plus Troubleshooting Tool

SmartFix™ Plus is an intuitive troubleshooting tool designed to familiarize users with Aircraft system operation and provide fault isolation procedures.

A subscription to the SmartFix™ Plus web based troubleshooting tool will be provided at no additional cost to the Buyer for a period of five (5) years following Delivery Time.

Additionally, a tablet computer configured to access SmartFix™ Plus will be provided to Buyer by Seller at Delivery Time, which includes a one (1) year subscription at no additional cost.

SmartFix™ Plus includes the following:

- Enhanced system descriptions;
- Troubleshooting recommendations for Crew Alerting System (CAS) messages, Onboard Maintenance System (OMS) fault equations, observed faults and troubleshooting hints and tips, as well as plain English descriptions for CAS and OMS fault equations;
- Detailed component locators using high-resolution images and Aircraft diagrams; and
- Continuous updates for the most recent information.

6.6 Smart Services

Buyer may enroll the Aircraft in an applicable Bombardier Smart Services component coverage program, providing cost coverage for most airframe system components repairs, replacement or overall in return for monthly payments based on an adjustable dollar rate per flight hour. Enrollment is subject to Buyer entering into the applicable Smart Services Agreement with Seller.

6.7 Computer Maintenance Management Services (CMMS)

In order to facilitate the performance of maintenance of the Aircraft at required intervals, Seller shall provide to Buyer the Computer Maintenance Management Services (CMMS) from the Seller recommended supplier of such services, free of charge for one (1) year following Delivery Time.

CMMS enables operators of Aircraft to monitor the routine maintenance and replacement of serialized components, to schedule services, and to record accomplishment of scheduled and unscheduled maintenance, Services Bulletins, and Airworthiness Directives.

Buyer acknowledges that an independent third party will provide the CMMS. Buyer further acknowledges that Seller shall not be a party to the CMMS Agreement between Buyer and the Seller recommended supplier of CMMS, shall have no obligation or liability, and that Seller makes no representations or warranties under such agreement, whether express or implied.

6.8 Medical Assistance Program

The Medical Assistance Program is offered free of charge for one (1) year following Delivery Time and, upon subscription, renewable annually thereafter with the service supplier. The service supplier provides the following services:

[5] *https://mybusinessaircraft.bombardier.com*

- Medical assistance: 24-hour pilot to physician hotline for immediate medical consultation while in flight or on the ground;
- Training: A comprehensive course on management of in-flight illness and injury training designed to help flight crews for three (3) people; and
- Aircraft first aid kit: First aid kit designed specifically for handling in-flight medical incidents.

Buyer acknowledges that the Medical Assistance Program will be provided by an independent third party. Buyer further acknowledges that Seller shall not be a party to the Medical Assistance Program agreement between Buyer and the Medical Assistance Program provider, shall have no obligation or liability and that Seller makes no representation on warranties under such agreement, whether express or implied.

7. WARRANTY

7.1 Subject to the terms set forth in this Article 7, Seller warrants to Buyer that at Delivery Time and for the Warranty periods set forth below, the Aircraft shall be free from: i) defects in material, ii) defects in manufacture and iii) defects in design, having regard to the state-of-the-art as of the time of design of the Aircraft ("Warranty"). In case of any such defect found during the Warranty periods set forth below, Seller's sole obligation and liability under this Warranty shall be a) expressly limited to correction by repair, replacement or rework of such defect by Seller at Seller's facilities, or at such other facility as may be designated by Seller, it being understood that Seller shall be responsible for the cost of the parts, material and labor related to such repair, replacement or rework provided such replacement parts were obtained from Seller and b) subject to Buyer giving written notice to Seller's Warranty Department of a claim under this Warranty (the "Claim") as soon as practicable and within the earlier of either (i) ninety (90) days following discovery of the defect or (ii) the expiration of the applicable Warranty period set forth below.

Cost and mode of transportation or shipping of any item(s), excluding the Aircraft and excluding customs, duties, and tariffs, whether to Buyer or to Seller, which are covered under the Warranty for the purpose of a repair, replacement or rework pursuant to the Warranty shall be via regular commercial overnight service as determined by Seller and at Seller's expense. For the full Warranty to apply, Seller must receive defective components within the timelines specified in the then current Seller's Spare Parts & Component Repair Price Catalog General Terms and Conditions available on Bombardier Business Aircraft customer portal website[6] by navigating to PARTS > Related Links > Parts General Terms and Conditions. The terms and conditions are subject to change.

7.2 The Warranty for the Aircraft shall be for 5,000 flight hours or sixty (60) months from Delivery Time, whichever first occurs.

7.3 In the event the Completion Work is not provided by Seller as part of the Agreement, then Buyer understands that no Warranty will be provided by Seller in relation to the Completion Work. In such cases, the Warranty for the Completion Work shall be provided by the third party provider and Seller shall not be held responsible for any Warranty issues that may arise in relation to the Completion Work. Furthermore, Seller shall have no obligation or liability for the Completion Work, including without limitation any lack of performance, reliability or maintainability of the completed Aircraft due to the Completion Work.

7.4 In the event the Completion Work is provided by Seller as part of the Agreement, then notwithstanding Article 7.2, the Warranty for the Completion Work shall be for 2,000 flight hours or twenty-four (24) months from Delivery Time, whichever first occurs.

For the purposes of this Section 7, Completion Work consists of: (i) Exterior paint, (ii) all interior systems, components, parts, and furnishings (iii) all vendor components that support the aforementioned components and, (iv) any installation performed under the Seller's completion Supplemental Type Certificate.

7.5 Notwithstanding Articles 7.2 and 7.4, the Warranty for the Avionics, as described in Article 4, shall be for 5,000 flight hours or sixty (60) months from Delivery Time, whichever first occurs.

7.6 Notwithstanding Articles 7.2, 7.4, and 7.5, the Warranty for airframe structurally significant items (primary metal structures) detailed in Sections 53 (Fuselage), 55 (Stabilizers) and 57 (Wings) of the Aircraft Structural Repair Manual in effect as of the date of this Agreement shall be for 20,000 flight hours or for two-hundred-fourty (240) months from Delivery Time, whichever first occurs; provided, however, that such Warranty period does not apply to doors, fairings, covers, access panels, non-metallic structures and systems/equipment support structures, for which specific items the Warranty period shall be as stated in Article 7.2.

[6] *https://mybusinessaircraft.bombardier.com*

7.7 Any Seller-issued Service Bulletin incorporated by Seller prior to Delivery Time shall be covered by the applicable Warranty set forth in Articles 7.2, 7.4, 7.5 and 7.6 except for any material furnished by Buyer. Excluded from the Warranty are vendor-issued Service Bulletins, Airworthiness Directives and/or advisory wires unless such Service Bulletins, Airworthiness Directives and/or advisory wires form part of a Seller-issued Service Bulletin incorporated by Seller prior to Delivery Time.

7.8 Buyer shall be entitled to claim a repair, replacement or rework pursuant to this Warranty for a defective part provided:

i. The Aircraft has been operated or maintained in accordance with Seller's Approved Flight Manual, Maintenance Manual and Service Bulletins, as each may be amended from time to time by Seller, and

ii. An installation, repair, alteration or modification to or of the Aircraft made by Buyer or a third party is not the cause or a contributing cause of the defect, and

iii. The Aircraft has not been subjected to misuse, abuse, damage or accident, and has not been improperly stored or protected against the elements when not in use.

7.9 Notwithstanding any other provisions herein, the Warranty shall not apply to the engines or the APU installed on the Aircraft. The engine and APU warranties are provided directly by the engine and APU manufacturers to Buyer, shall be the sole responsibility of the manufacturers, and the rights of Buyer with respect to the engines and APU shall be a matter as between the engine or APU manufacturer and Buyer. Buyer agrees that Seller shall have no obligation or liability for the engines or the APU including, without limitation, the Warranty for the engines or APU, service bulletins for the engines or APU and/or any lack of performance, reliability or maintainability of the Aircraft due to the engines or APU. Notwithstanding the foregoing, the Warranty does apply to Seller's installation of the engines and APU on the Aircraft including the design of such installation.

7.10 The Warranty shall not apply to the following:

i. Any accessory, equipment or part incorporated in the Aircraft, which is not furnished pursuant to this Agreement;

ii. Scheduled maintenance, inspections and overtime;

iii. Normal wear and tear items, such as but not limited to: brake wear, tires, exterior paint wear or exterior paint mismatch as a result of a repair, accrued life usage, consumables (such as fuel, oil, liquid de-icing systems and filters) or any servicing or replenishment of such consumables, interior and exterior lights (such as light bulbs, lamps, lighting strips, Light Emitting Diodes [LED's]) and interior and exterior placards;

iv. Ground support equipment (including engine covers), pitot covers, loose equipment, tooling, windshield rain repellent, windshield crazing;

v. Corrosion and erosion caused by operational use of the Aircraft, exposure of the Aircraft to environmental elements regardless of time in service, diverter strips, static wicks, seals (including but not limited to door, panel, aerodynamic or fairing seals) and seized or stripped hardware;

vi. Foreign object damage (FOD); and

vii. Preventative maintenance or components changed for precautionary measures, as well as Buyer requests for the replacement of parts, software upgrades, and flight test and crew expenses associated with re-certification of Aircraft.

7.11 Any repair, replacement or rework under the Warranty shall be covered to the extent of the unexpired portion of the applicable Warranty period set forth in this Article 7 remaining at the time of such repair, replacement or rework.

7.12 All costs resulting from the removal of non-defective items, (No Fault Found) other than by Seller or Seller's representatives, shall be paid by Buyer.

7.13 Buyer shall maintain complete records of operations and maintenance of the Aircraft and shall make such records available to Seller as Seller may require. If Buyer fails to maintain such records Seller shall be relieved of its Warranty obligations to the extent that such failure affects Seller's obligations under this Warranty provision.

7.14 The Warranty is accessory to the Aircraft and follows the rights to the Aircraft without requirement of Seller's approval for transfer. The Warranty is for the benefit of Buyer, its successors and assigns and all persons to whom title to or possession of the Aircraft may be transferred during the Warranty periods set forth herein, provided that any such persons or entities shall remain subject to the applicable provisions of this Agreement to the same extent as Buyer.

8. PATENT AND TRADEMARK PROTECTION

Subject to the provisions set out below, Seller agrees to indemnify and defend Buyer and save Buyer harmless against any claim brought against Buyer that Buyer's use of the Aircraft constitutes an infringement of any a) U.S. or Canadian patent or trademark, or b) foreign patent or trademark having a United States or Canadian counterpart and issued by any country which has ratified and is at the time of any such actual or alleged infringement a contracting party to the Convention on International Civil Aviation and the International Convention for the Protection of Industrial Property provided that:

i) Buyer notifies Seller in writing of the claim within ten (10) days after Buyer's receipt of the claim;

ii) Upon Seller's written request, Buyer immediately gives to Seller control over the defense and/or settlement of the claim;

iii) Buyer fully cooperates with Seller in such defense and/or settlement; and

iv) Buyer does not prejudice Seller's conduct of such defense and or settlement.

In no event shall Seller have any obligation with respect to any liability, loss, damage or expense in respect of, arising out of or resulting from any lack or loss of use of the Aircraft.

The foregoing shall only create an indemnity obligation upon Seller for claims which are solely and directly based upon the use, sale or offer for sale of the Aircraft. No indemnifying obligation shall arise or exist with respect to claims that are based upon the engines, avionics equipment, or any accessory, equipment or part thereof, or any other accessory, equipment or part which was not manufactured by Seller or which was not manufactured exclusively pursuant to Seller's detailed design, or which was included in the Aircraft either by Buyer, on behalf of Buyer or at Buyer's request, or which was supplied by Buyer or procured or manufactured by Seller in accordance with Buyer's specifications, nor shall any obligation arise or exist if the alleged infringement is based upon the use of the Aircraft in a manner prohibited by relevant directives or regulations issued by appropriate government agencies or instrumentalities.

Subject to the foregoing provisions of this Patent and Trademark Protection, Seller shall pay court costs and its reasonable attorney's fees for defending such claim, as well as the amount of any settlement deemed advisable by Seller or any damages that may be awarded against Buyer in respect of such claim. At its own expense, Seller may at any time, at its option:

i) Procure for Buyer the right to continue to use the Aircraft; or

ii) Modify the Aircraft, including modifying or replacing any part thereof to render the Aircraft non-infringing.

In the event the use of the Aircraft by Buyer has been enjoined, Buyer shall have the right to require Seller to take action in accordance with the foregoing, provided that it shall be Seller's sole option as to which alternative action it takes. Except as expressly provided above, Seller does not provide any other representation, warranty or protection concerning patents or trademarks with respect to the Aircraft.

9. CONSULTANTS

Should Buyer retain the services of a consultant or other third party representative (the "Consultant") in connection with this Agreement then, before any contact be initiated between Consultant and Seller, Buyer shall (i) provide Seller with a written notice confirming the appointment of such Consultant and describing the responsibilities of such Consultant and the different matters (eg: technical and/or financial matters) with respect to which Consultant has been granted authority to act on behalf of Buyer and bind Buyer and (ii) cause Consultant to sign Seller's standard non-disclosure agreement. Seller is entitled to conclusively rely on the content of such notice in its dealings with Consultant.